VTOL Drone Proposal:
“The Aero Bear”

Longyu Li & Megan Millet

I. Introduction

The incredible dangers that come with avalanches spark continuous research in order to mitigate future disasters in mountainous regions, and especially, in places of popular ski-resorts. Snow slopes become unstable due to the shear force applied to the snow pack failing, thereby causing the weak layer of snow to slide and eventually create a tumult of snow in the form of an avalanche (Eidenbenz). Skiers are prone to avalanche slides, causing them to be buried beneath a layer of thick snow and ice once the avalanche reaches its end. Studies estimate that the survival rate for these buried victims is "around 90% if the victim is rescued within the first 15–20 min" (Rauch). It is imperative that rescue teams are able to make a speedy recovery of buried persons, despite the fact that it takes at the very least "3-5 min" to locate the victim (Rauch). In this short window of time, every second saved can help a victim be spared from asphyxiation– this is where drone avalanche research and proper rescue utilization can make a lasting impact. With the environmentally-friendly Aero Bear drone model, drone pilots will be able to quickly locate and extract buried individuals while the rescue team travels to the scene, thus facilitating the rescue team's efforts and minimizing the time it takes to save an avalanche victim.

II. Design Overview

Aero Bear is a revolutionary drone that optimizes search-and-rescue missions in frozen, mountainous climates. As displayed in Figure 1, the Aero Bear Rescue Model is a two-meter long quadcopter with six rotors, a medical kit trap-door, one geological surveying camera with a 360° aerial view and thermal vision optics, a secondary rear-view standard 360° aerial view camera, two retractable sleighs-runners, a lithium ion battery, a drone control board, and a built-in retractable snowblower. The design itself is based on a friendly polar bear with a classic Canadian-puffer jacket and backpack painted on (painting job shown in Figure 2), ensuring that anyone would recognize the rescue drone's unique design, distinguishing it from other regular drones. Furthermore, this design can help reassure victims and make them feel a bit safer once they are found and rescued by the Aero Bear, thus creating a publicly recognizable rescue mascot.

In Figures 3 and 4, the Aero Bear Mitigation Model can be used in avalanche prevention processes. This model is very similar to the Rescue Model, but the medical-kit trap-door is utilized instead for dropping explosives to create controlled avalanches. Also, this model is 1-meter long to reduce production costs, and it is equipped with two standard 360° aerial view cameras. Compared to the Rescue Model, it lacks many features as it is solely for avalanche mitigation, and would be used independently of the Rescue Model to ensure that if a disaster does strike, the Rescue Model can operate while the avalanche mitigation services continue elsewhere.

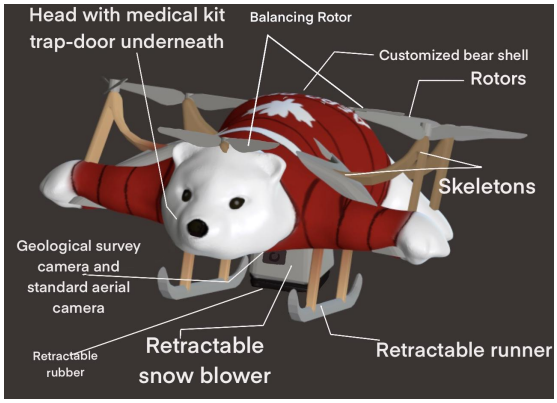

Figure 1: Aero Bear Rescue Model

Figure 2: Aero Bear Rescue Model Painting design

Figure 3: Aero Bear Mitigation Model

Figure 4: Aero Bear Mitigation Model Painting Design

III. Design Functions

The Aero Bear uses a heavy duty snowblower to rescue victims (Figure 5). Any outer layer of ice will be destroyed by the ice cutter inside the blower. Since victims of an avalanche are likely to be buried in a 30-45º angle and at a 1.0-1.3 meter depth, the outer face angle is set to 80º to efficiently extract the snow. As Figure 6 demonstrates below, after snow gets extracted, it will be pumped out through the nozzle and released through the back of the blower. This operation is monitored by the live detecting system. Further, after 90 cm of digging, when the blower is approaching the victim the ice cutter will be turned off and the blowing operation will be switched to gentle mode– meaning the rubber will extend more to create a distance between the ice cutter and the victim, thus reassuring their safety.

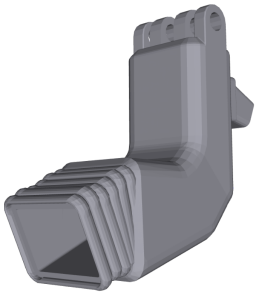

Figure 5: Snowblower Structure

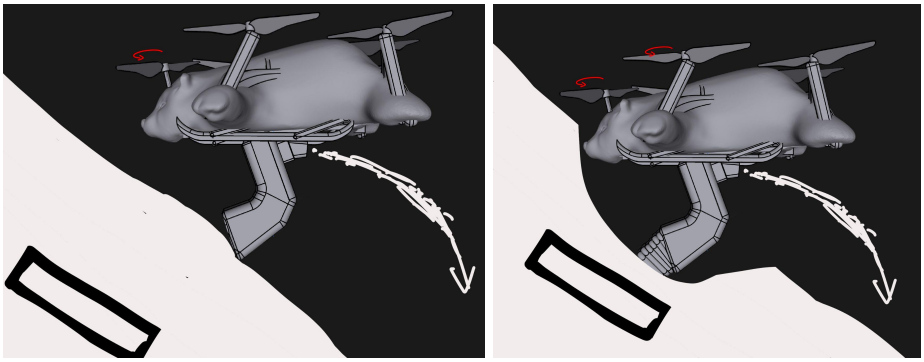

Figure 6: Aero Bear Operating Snowblower

Figure 7 displays the general structure of the Aero Bear. The Aero Bear has six rotors, four major powering rotors plus two balancing rotors. The drone's weight is designed to be balanced while undergoing searching mode, however, the retraction of the snowblower and runner will interrupt the weight distribution. Therefore, the gradienter is applied vertically in the drone to detect this weight change, and then the balancing rotor on the head and on the tail will respond to this counter force, providing a lift to restore the drone's balance.

The Aero Bear's outer shell has plenty of advantages. With a welcoming appearance that gives emotional comfort to victims in fear, the bright red color is also prominent in the snow, making it very easy for the rescue team to spot. Although it is lightweight, the shell is able to provide a protective barrier for the inner structure while operating in extreme conditions for a long duration. Moreover, it increases the carrying capacity of the drone. For example, the snowblower can be retracted inside the shell while operating searching tasks, so that the air flow underneath the drone will not be interrupted. Considering the placement of the cameras (Figure 8), this design can provide a full aerial view using both the front and back cameras (Figure 9).

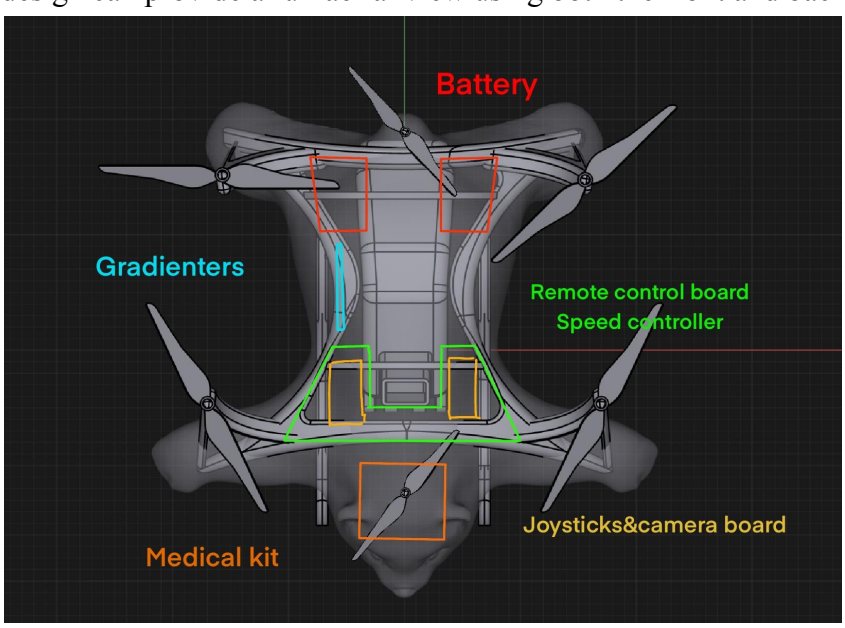

Figure 7: Aero Bear Structural Map

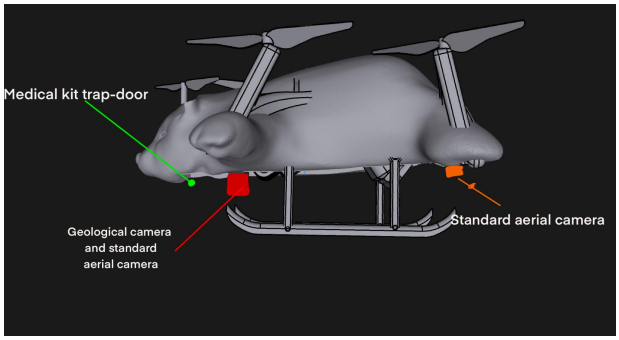

Figure 8: Camera Location
(Landing Mode with Runners Open)

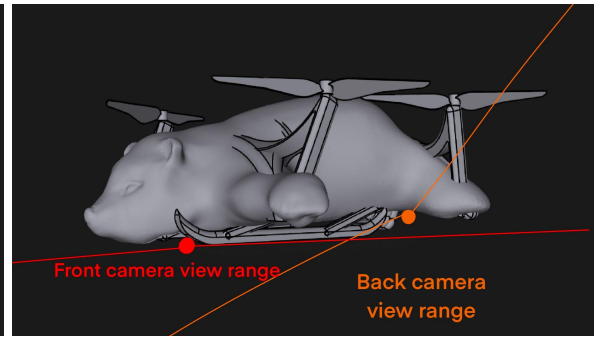

Figure 9: Camera View Range

Underneath the bear shell, the inner frame of the Aero Bear uses a hollow skeletal design to minimize the weight (Figures 10, 11, 12) . The front frame is slightly wider than the back, to have a greater effect of counterbalancing the weight change during operation. This skeleton is imitating the rib cage of a bear, and it is designed to store the snowblower and the electrical devices (lithium ion battery and drone control board) within. The bear shell will provide a smooth, airfoil-like, aerodynamic surface for the drone, rather than having the electrical parts be exposed to the weather conditions while simultaneously minimizing air resistance.

The snowblower, medical trap-door, and the two balancing rotors are wired independently from the major control system. The shell, runner, and snowblower are removable when performing regular security surveillance operations, meaning any excess parts can be removed from the drone itself, leaving behind a skeletal drone for basic operations, which is more energy efficient in lieu of the larger Aero Bear models. Additionally, the camera can be installed on the second and the third ribs of the structure instead of on the neck of the bear. Finally, the skeletal drone is able to land stably with four supporting legs at the bottom.

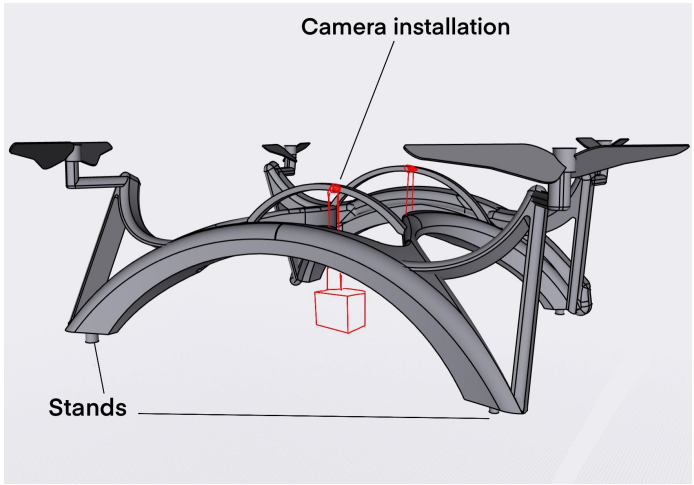

Figure 10: Inner Skeleton structure

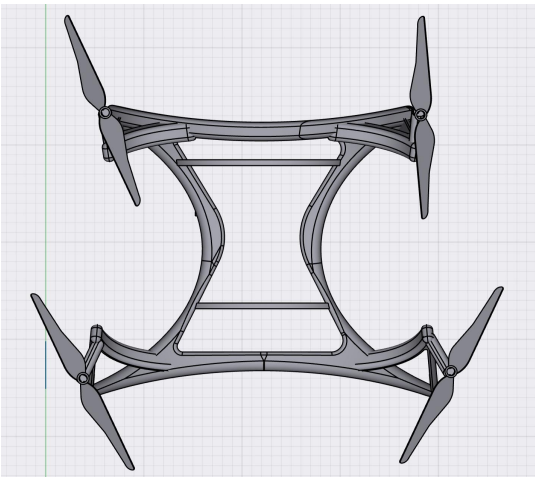

Figure 11: Inner Skeleton Top View

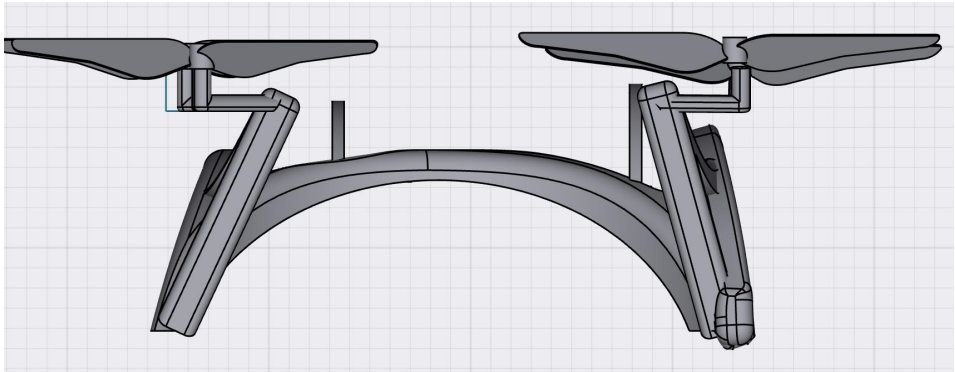

Figure 12: Inner Skeleton Front View

IV. Sustainably Built

Environmental efforts are at the forefront of future design in all fields of engineering, and the Aero Bear proudly meets the expectations of the current climate crisis. The drone will be built using Recycled Polyimides, which have amazing properties including "chemical and radiation resistance, high-temperature resistance, low-temperature tolerance, and excellent dielectric properties" (Zenghui). Since the Aero Bear's primary location of operations will be in the Canadian Rockies, it is crucial for the drone to be built out of a material that can withstand below freezing temperatures and harsh environmental factors. Recycled Polyimides (RPI) is incredibly durable and the material is already used to create large-scale commercial airplanes and military jets (Smith). This ensures that the Aero Bear drone made from RPI will be able to withstand freezing temperatures, high temperatures, high-altitudes, and environmental conditions that airplanes and jets endure. Another bonus to using RPI for the drone is that it is an extremely light weight material, thus enabling the Aero Bear Rescue Model to have many added modifications and features (Smith). The drone skeleton, bear mold, rotors, and the body of the snowblower can all be made from this material, which can withstand both the heat from the battery and the harsh freezing outside temperatures. The nozzle of the snowblower, however, will be made from recycled rubber for flexibility and improved snow-suction. Overall, the Aero Bear's design uses as many recycled resources as possible for a brighter and cleaner future.

V. Rescue Procedure

Post-avalanche rescue operations run on a tight window to save submerged victim's faced with only minutes left to live. It is crucial for rescue teams to work in conjunction with the Aero Bear so as to minimize the amount of time it takes to locate, extract, and apply life-saving medical procedures on the afflicted individual. Once the rescue team is alerted of an avalanche submerging someone (or multiple people) in the snow at the Olympic Valley Resort, the Aero Bear Rescue Model will immediately depart to the location of interest. Utilizing the geological surveying camera that has thermal optic capabilities, the Aero Bear Rescue Model can scan a large space will hovering over the avalanche site, searching for a heat signature beneath the

snow. After locating the buried victim, the Aero Bear will mark the coordinates using the GPS tracking device so that the rescue team knows the exact location when they arrive at the situation. The Aero Bear Rescue Model will then begin to extract the buried person by using the snowblower to remove the snow on top of the person, thereby exposing them to fresh air so they would not die of asphyxiation. If the person is still conscious, then the Aero Bear can drop a medical care package using a trap-door feature to provide some blankets, hand warmers, and other supplies. At this point, the medical rescue team will arrive to provide emergency aid to the individual while taking them back to safety.

While this may seem like a very simple process for a search-and-rescue mission, it is imperative that there be a control tower and a logistics team to ensure that the drone can make its way to the avalanche site unhindered. The control tower, with a crew of five, will oversee the operation and delegate tasks to the rescue and logistic teams in case of any unforeseeable circumstances. Further, the control tower will be able to send an emergency signal to any nearby commercial aircrafts to warn them of the Aero Bear Rescue Model's flight path. During this, the logistic team's role will be to operate the drone for both rescue missions and avalanche mitigation missions. The logistic team should be composed of at least two drone operators, a repair crew of two engineers, and two surveyical analysts who will locate the avalanche victim by analyzing the thermal energy signatures being collected by the drone, and then send this information to the rescue team of five medical personnel. The logistic team will operate in an Aero Bear Drone Hangar. Together, the rescue team, logistics team, and control tower will be able to save a lot of time in rescuing victims from avalanches.

VI. Avalanche Mitigation

A dual purpose of the Aero Bear will be for avalanche mitigation purposes. Specifically, the Aero Bear Mitigation Model will utilize the trap-door contraption to drop explosives onto a controlled site in order to create an artificial avalanche. The benefit of having a separate Aero Bear Mitigation Model is that if an emergency arises while artificial avalanches are being induced, then the Aero Bear Rescue Model will be able to rescue any buried victims, rather than using the rescue model for avalanche mitigation and forcing the model to land and restock on medical supplies during a crisis. This enables both Aero Bear models to be in use at the same time, if the need ever arises.

VII. Budgeting

Estimated Yearly Budget	Est. Cost ($)
Labor Costs:	
Logistics Team Salaries ($30/hr)	351000
Rescue Team Salaries ($35/hr)	341250
Command Tower Salaries ($30/hr)	292500
Drone Repairs:	
Paint Refurbishing	100
Rotor Repairs	600
General Cleaning	250
Total Cost:	**985700**

Estimated Initial Budget	Est. Cost ($)
Drone Parts:	
2 Lithium Ion Battery	3400
12 Rotors	6000
Snow Blower	500
Recycled Polyimides	1000
1 Geological-Survey Camera	3500
Recycled Rubber	50
2 Control Boards	1000
3 Standard Aerial Cameras	1500
Paint and Lacquer	100
Total Cost:	**17050**

The initial and yearly budgeting schemes include costs of both the Aero Bear Rescue Model and the Aero Bear Mitigation Model. For the recycled polyimides, recycled rubber, and paint/lacquer, the average prices are sourced from the industrial averages per meter of material. Prices for the lithium ion batteries are based on the average cost of a Tesla car battery, since the drones will be quite large. Home Depot's price averages were used for the rotors and snowblower costs, and finally, the cameras and control board prices were based on other drone model prices, including but not limited to the Draganfly drone model and the Topodrone drone model. As for the yearly budget, given that the rescue team is faced with danger on a daily basis, their estimated salary will be greater than the logistics team and control tower team, but all salaries are well above British Columbia's minimum wage to account for their difficult tasks. Some damages can always happen when operating machinery, therefore the estimated cost of repairs for the drone's rotors and paint job are listed, as well as regular cleaning and maintenance costs.

VIII. Conclusion

Search and rescue expeditions are grueling, dangerous, and time dependent. The vast capabilities of the Aero Bear enable alpine rescue teams to hastily retrieve buried avalanche victims while the rescue team, prepared to administer medical aid, simultaneously arrive at the scene. Ultimately, this approach to search and rescue avalanche missions will maximize the number of lives saved in the Canadian Rockies. Additionally, the Aero Bear is carefully designed

to be environmentally-friendly by using sustainable and recyclable resources, all while keeping the cost of production minimal. With coordination and steady-planning, the Aero Bear will be able to save many lives and prevent the death of many lives from avalanches at the Olympic Valley Ski Resort and beyond.

Bibliography

Eidenbenz, David, et al. “Survival Probability in Avalanche Victims with Long Burial (≥60 Min): A Retrospective Study.” *Science Direct*, Elsevier, 6 June 2021, https://www.sciencedirect.com/science/article/pii/S0300957221002148.

McClung, David, and Peter A. Schaerer. “Avalanche Formation.” *The Avalanche Handbook*, Mountaineers Books, 2009, pp. 73–82.

Rauch, Simon, et al. “On-Site Medical Management of Avalanche Victims-A Narrative Review.” *International Journal of Environmental Research and Public Health*, MDPI, 29 Sept. 2021, https://www.ncbi.nlm.nih.gov/pmc/articles/PMC8507645/.

“Recycled Polyimide: Polymers Recycling: Polyclean Technologies.” *Polyclean*, https://www.polycleantech.com/recycled-polyimide/#:~:text=Finely%20milled%20recycled%20polyimide%20is,printing%2C%20and%20other%20demanding%20applications.&text=Although%20140%20mesh%20is%20our,sieves%2C%20whether%20finer%20or%20coarser.

Smith, Kevin. “High-Performance Polymers Components .” *Advanced Materials and Processes*, Saint-Gobain Performance Plastics, https://www.asminternational.org /documents/10192 /1900564/amp17005p3 0.pdf/e5a7eac3-9607-4738-b753-53d7db2cbee6/AMP17005P30.

Transport Canada. “Flying Your Drone Safely and Legally.” *Transport Canada*, Gouvernement Du Canada, 1 Sept. 2020, https://tc.canada.ca/e n/aviation/drone-safety/learn- rules-you-fly-your-drone/flying-your-drone-safely-legally.

Zenghui Yang, Yaoming Zhang, Song Li, Xinrui Zhang, Tingmei Wang, and Qihua Wang. ACS Sustainable Chemistry & Engineering 2020 *8* (51), 18869-18878. DOI: 10.1021/acssuschemeng.0c05481

* Note: All images and figures were created using Shapr3D, Nomad, Forger, ProCreate